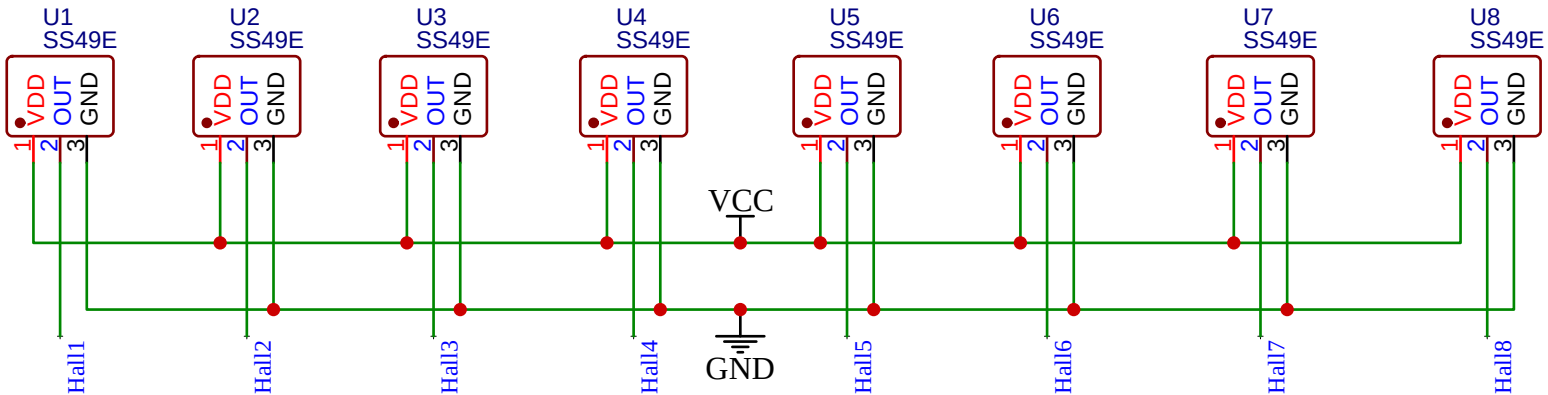

TITLE: Hall board		REV: 1.0
	Company: TETA Tech	Sheet: 1/1
	Date: 2025-05-28 Drawn By:	